TWINFLEX FLASHPOINT

The Twinflex Flashpoint allows a simple and effective visual indication directly from the 2-wire zone, complete with a sounder.

It has been designed to comply with the European standard EN54 part 3.

This zone powered combined sounder and beacon is available in a low profile or domed version, and can be manufactured in alternative colours if required.

Whilst in alarm the flashpoint synchronisation is uniquely reset every 10 seconds to ensure that the beacon's flash rate remains in absolute synchronicity across the entire system.

Installation is made simple by first fixing the base and then simply plugging in the unit.

As with all Rafiki sounders the flashpoint features an anti-tamper mechanism to ensure that the device is only released with the use of the head removal tool.

Technical specifications

Compatibility:	Twinflex 2-wire	
Operating Temperature:	-10°C to 50°C	
Voltage Range:	18 to 35v DC	
Operating Current:	Quiescent:	190uA
	Sound high:	13mA
	Sound low:	9mA
	Beacon:	6mA
Loading:	Sounder:	1SLU (max 32 SLUs per zone)
	Beacon:	1SLU
Sound Outputs:	Low:	78dB(A)
	High:	90dB(A)
LED Operation:	EOL:	5s intervals
Part Code:	Low Profile:	302 0012
	Domed:	302 0022

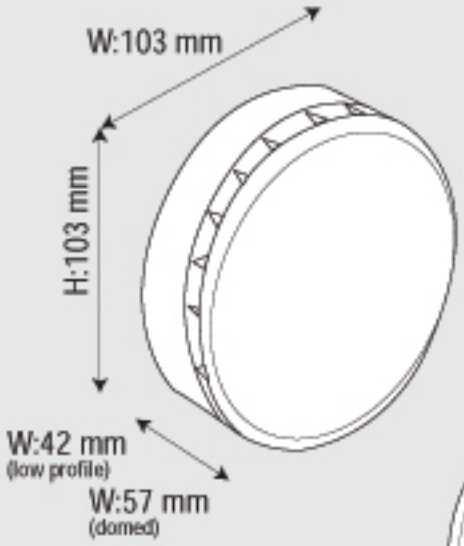

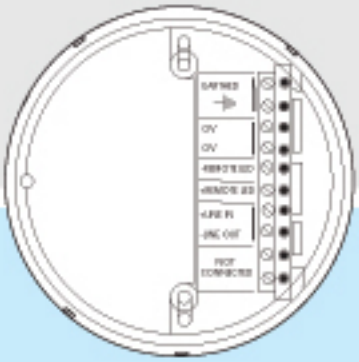

rafiki PROTECTION

Intelligent Fire Technology