GEOFIRE
FIRE SECURITY SOLUTIONS

TRX
INSTALLATION INSTRUCTIONS

SPECIFICATION

GENERAL: Suitable for systems requiring a simple unregulated 24V dc power supply where the charging of batteries is not required.

Model	Voltage dc @ Continuous Rating	Max Current 3hrs Max Duration	Nominal Off Load Voltage	Continuous Current Load Rating	Output Fuse Rating (Amps)	Relay Rating
TRX24-10-2	24	1.0	30	0.5	1	1 amp S.P C/O
TRX24-30-2	24	3.0	30	1.5	3	5 amp D.P. C/O
TRX24-50-2	24	5.0	30	2.5	5	5 amp D.P. C/O

INPUT VOLTAGE: 230V ac 50Hz, Fused 2 Amp.

OUTPUT VOLTAGE: Full wave rectified, with smoothing capacitor. NO REGULATION PROVIDED. Nominal 24V dc with off load voltages as shown above. Fused, 20mm glass.

RELAY VOLTAGE: All models have change over contacts which are polarised and suppressed. Provision for a variety of connection methods.

ENCLOSURE: 18 swg mild steel cabinet
18 swg aluminium lid
3 off 20mm knockouts
4 off dimpled fixing holes
Dimensions: 230mm W x 160mm H x 85mm D

Finish: smooth texture power coat, light grey.
Match reference BS4800 1982, 18B17 (Blue Mink).

EMC DECLARATION: Conforms to EMC Directive 89/336/EEC inclusive of Amendment 92/31/EEC & low voltage directive 73/23/EEC.

INSTALLATION INSTRUCTIONS

1. Ensure cabinet is securely affixed to a firm surface by the four fixing holes provided.
2. Connect in supply wires to main terminals provided.
3. Check mains voltage will not exceed recommended value and switch on.
4. Use voltmeter to ensure output voltage 'off load' meets recommended figure.
5. Switch off supply and connect in secondary wiring to the output terminals, ensuring any load does not exceed the maximum or continuous currents shown above.
6. If relay control is required, then connect up using the drawings as a guide and observing correct polarity of the relay coil.
7. Ensure that any equipment connected to this apparatus is suitably suppressed.

GEOFIRE
High Etherley, Bishop Auckland, Co. Durham, England, DL14 OHY
Tel: +44 (0) 1388 832 252 Fax: +44 (0) 1388 834 220
E-mail: info@geofire.co.uk Web: www.geofire.co.uk

MODELS: TRX24-10-2
TRX24-30-2
TRX24-50-2

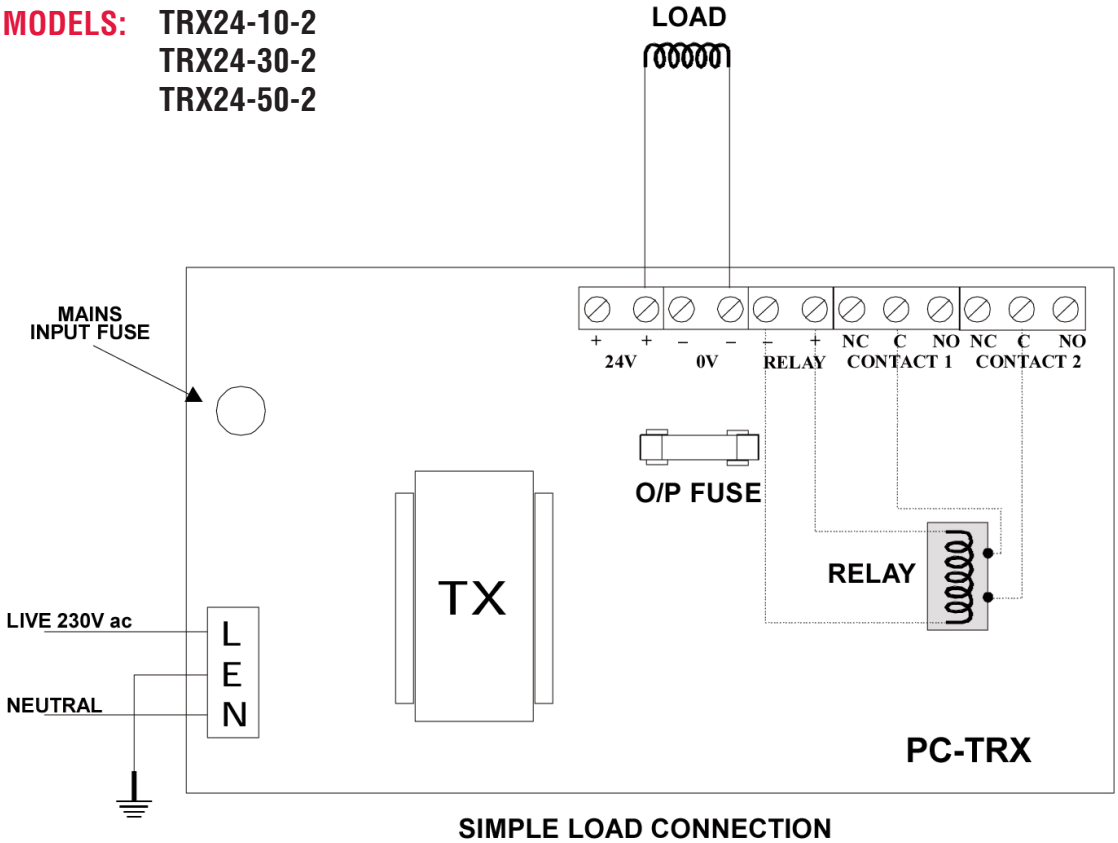

SIMPLE LOAD CONNECTION

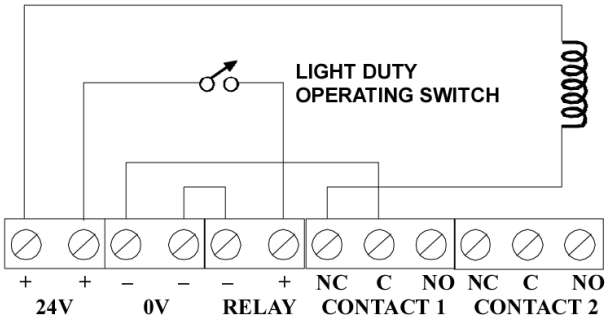

Using a light duty, voltage free, switch or relay to operate the TRX supply relay.

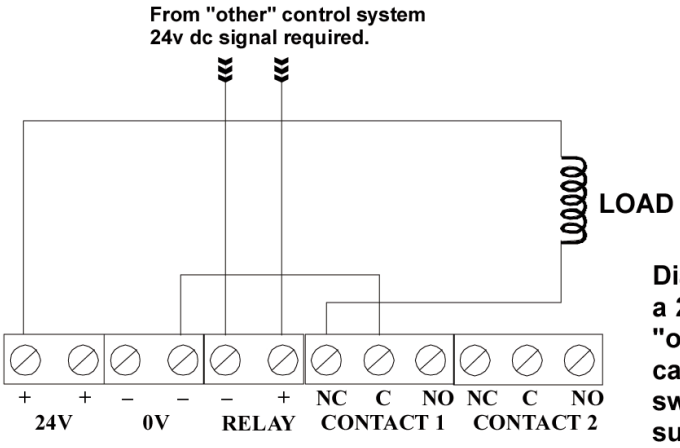

Diagram shows how a 24V signal from "others" equipment can be used to switch the TRX supply relay

For recommended loading and specifications, see data sheet